FPMA-W500 NEWSTAR LCD/LED/TFT WALL MOUNT

The FPMA-W500 is a LCD/TFT wall mount for screens up to 24" (60 cm).

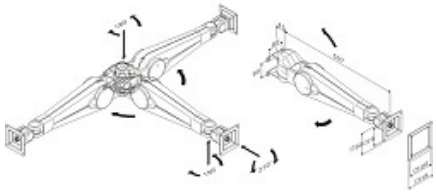

The NewStar LCD/TFT wall mount, model FPMA-W500, allows you to mount a flatscreen to the wall.

The mount has 5 movements offer maximum flexibility. This model allow users to swing, tilt and turn the flatscreen for maximum efficiency and comfort. The height adjustment is 55 cm. Color crème.

Cables can be hidden in the column.

It easily connects to the back of each flatscreen due to the VESA hole pattern. This wall mount holds screens up to 10 kg with a VESA 75x75 or 100x100 mm hole pattern. Ideal to mount screens up to 24" to the wall.

SPECIFICATIONS

Max. weight	10
Color	Grey
Warranty	5 year
Screen size	10 - 24"
VESA minimum	75x75 mm
VESA maximum	100x100 mm
Height	0 - 45 cm
Distance to wall	55 cm
Tilt	180°
Swivel	180°
Rotation	270°
Screens	1
EAN code	8717371440060

MAX. WEIGHT

SCREEN SIZE

NewStar Products Europe B.V.
Wateringweg 62/B
2031 EJ HAARLEM
THE NETHERLANDS

Phone : +31(0)23-5478888
Fax : +31(0)23-5478889
Email : info@newstar.nl
Website : www.newstar.eu

NewStar cannot be held liable for any inaccuracies and copyrights.
No part of this publication may be reproduced and/or published by print, photocopy, microfilm or in any other way, without prior written permission of NewStar Computer Products Europe BV.

FPMA-W500 NEWSTAR LCD/LED/TFT WALL MOUNT

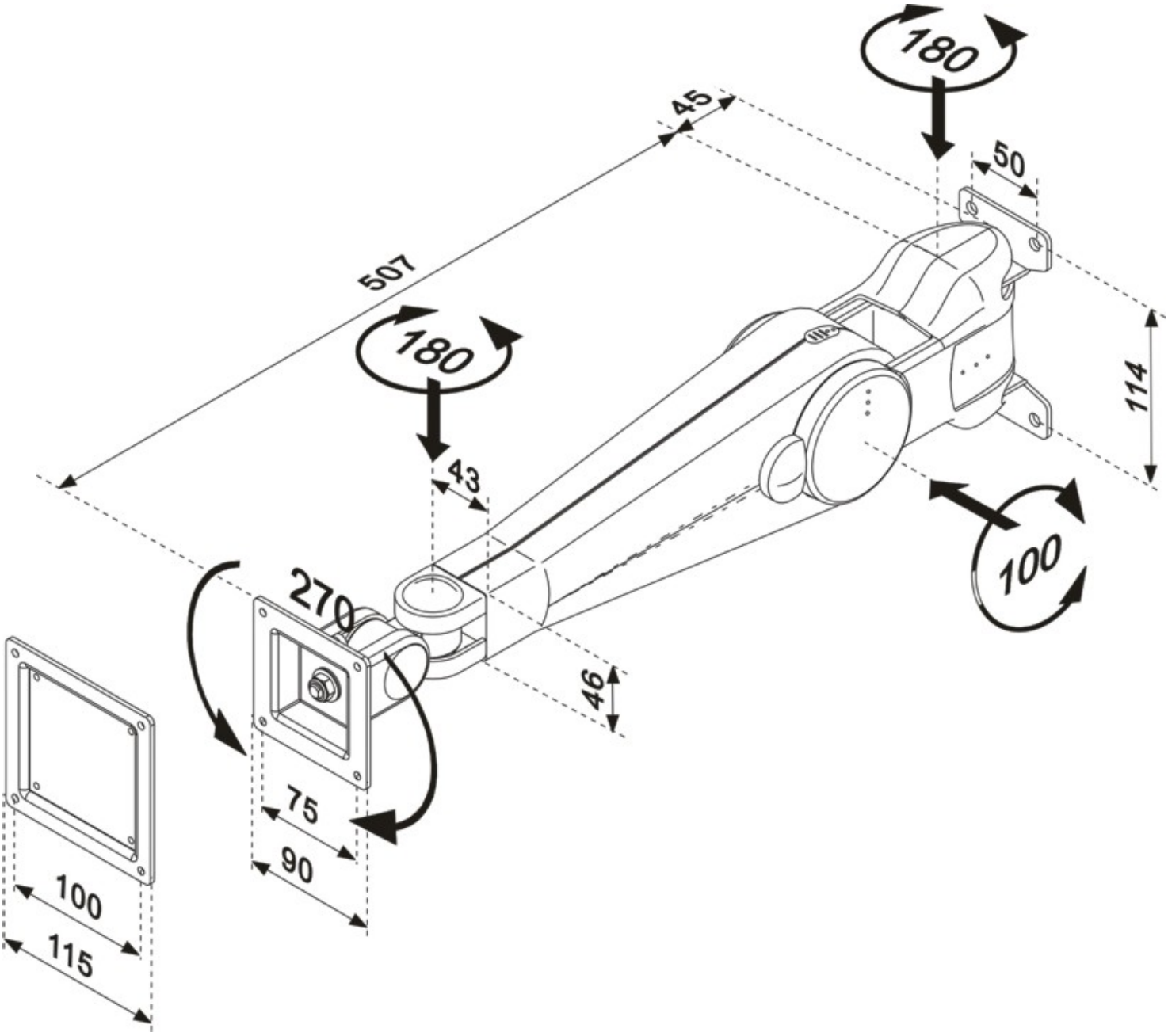

NewStar Products Europe B.V.
Wateringweg 62/B
2031 EJ HAARLEM
THE NETHERLANDS

Phone : +31(0)23-5478888
Fax : +31(0)23-5478889
Email : info@newstar.nl
Website : www.newstar.eu

NewStar cannot be held liable for any inaccuracies and copyrights.
No part of this publication may be reproduced and/or published by print, photocopy, microfilm or in any other way, without prior written permission of NewStar Computer Products Europe BV.